DOI 10.47176/sjis.4.1.1

Original Article

SRPH

SJIS, 2022; 4(1): 1-8

Development and Validation of a New Automated System for Solubility Determination

Vahid Jouyban-Gharamaleki[1], Ahmad Ghanbari[2], Yashar Sarbaz[3], Abolghasem Jouyban[4], Elaheh Rahimpour[5*]

[1,4,5] Pharmaceutical Analysis Research Center and Faculty of Pharmacy, Tabriz University of Medical of Sciences, Tabriz, Iran.
[2,3] Department of Mechatronics Engineering, Faculty of Engineering Emerging Technologies, University of Tabriz, Tabriz, Iran.

***Corresponding Author:**
rahimpour_e@yahoo.com

Received: 15 November, 2021
Accepted: 13 January, 2022
Published: 25 January, 2022

ABSTRACT

Today, the mechanized systems used in the various scientific fields overcome the labor-intensive steps associated with the increasing security and decreasing errors. In pharmaceutical science, different methods have been developed for mechanizing drug solubility determinations. In this study, a new automatic system has been reported for drug solubility determination. A prototype of the instrument was made and tested for solubility determination of acetaminophen in some aqueous mixtures at various temperatures. This device can determine the saturation point through diluting (an) oversaturated solution with solute. Accordingly, a mechanism has been designed to inject the solute into the solution whose volume or amount can be adjusted by the operator. For controlling and setting up the parts of the device, exclusive software is also offered. The maximum individual percentage deviation for the obtained solubility data compared with those measured with the conventional methods is 6.4%. The maximum *RSD*% for the replicated data with the developed device has also been reported to be 3.9%. The developed system was designed by the authors and is therefore entirely novel.

Keywords: Automated system, Solubility determination, Solubility

Introduction

Solubility is a crucial physicochemical parameter for any potential drug candidate, and its measurement in various solvents is one of the key elements of pharmaceutical compound characterization during the discovery and development process [1, 2]. The methods used for drug solubility measurement are classified as 1) manual experimental methods [3], 2) mathematical predictive models [4] and 3) smart/synthetic methods [5, 6]. The manual methods are tedious and time-consuming, which may cause some limitations in the discovery and development of new drug candidates. The second methods which have been proposed by most of the scientists in this field are the easy and fast ways to describe the solute solubility behavior. These models can be categorized into two classes: a) theoretical and b) semi-theoretical or empirical approaches [7]. Theoretical models are helpful for a better understanding of the drug solubility pattern in various solvents. Whereas empirical models are used for fitting experimentally measured data. Empirical models are also categorized into two groups; predictive models and correlative equations. In contrast to correlative equations, no experimental data is required for using the predictive models [8]. Synthetic and smart methods which are the next solubility determination methods, and preferred over the other experimental methods due to fewer limitations in the practice applications [9]. These methods are simple and fast and the obtained results are more reliable comparison with many other solubility determination methods [10].

There are a lot of methods [11-14], as well as the automated systems designed based on these methods [15-18], for determining the solubility of drug molecules and potential drug candidates. We have reviewed and discussed some most applicable devices

[Downloaded from sjis.srpub.org on 2026-11-27]

[DOI: 10.47176/sjis.4.1.1]

Publisher: Scientific Research Publishing House (SRPH), Shirvan, Iran
http://srpub.org
Email: sjis@srpub.org

used to monitor the solute dissolution and solubility including particle video microscope, focused beam reflectance measurement, three dimensional optical with selective multi depth focus, infrared spectroscopy, Raman spectroscopy, high performance liquid chromatography, nephlometry and UV-spectroscopy along with some developed smart methods in previous work [19].

Herein, a new highly automated system is designed and validated based on acetaminophen solubility as a model drug. It uses two syringes for the solvent injection automatically inside the incubator according to a predefined specific program. In this system, an over-saturation solution in a closed space with constant temperature is stirred by a magnetic stirrer, a laser monitoring system analyses the alteration of the particles inside the solution and if needed, the solvents are injected by an automated injection mechanism to dilute it and reach to a saturation point.

Experimental Section

Materials and Methods

Acetaminophen powder (purity of 99.0%) was gifted by Daana Pharmaceutical Company (Tabriz, Iran). Ethanol (mass purity of 99.5%) was purchased from Scharlau Chemie (Barcelona, Spain) and distilled water (Lab-made) was used throughout this work.

Validation of the developed system was performed by the determination of the solubility of acetaminophen as a model drug in the aqueous mixtures of ethanol at various temperatures and compared with the corresponding values reported in the literature [20]. The differences were computed using the individual percentage deviation (*IPD*) as:

$$IPD = 100\left(\frac{C_T^{Measured} - C_T^{\text{Reported}}}{C_T^{\text{Reported}}}\right) \qquad (1)$$

All data handling procedures were carried out using custom built software (KIPA. Co.) [21] and add-ins.

Incubator and related sections

In the proposed automated system, the temperature alteration of the experiment media is controlled by a two-shelled water bath and its adjustable range is between 15 to 40°C. To increase or decrease the temperature, a heater and a cooler are used which are connected directly to the enclosed space by a pump and polyurethane tubes. In order to determine the power of the employed cooler and the heater, the maximum thermal energy losses must be measured in the highest/lowest environment temperature. The assumption is that the heat transfer occurs around the incubator cylinders; however, it can be ignored due to the insulation above and under the incubator. Figure 1 shows the scheme of the incubator wall and the imposing conditions.

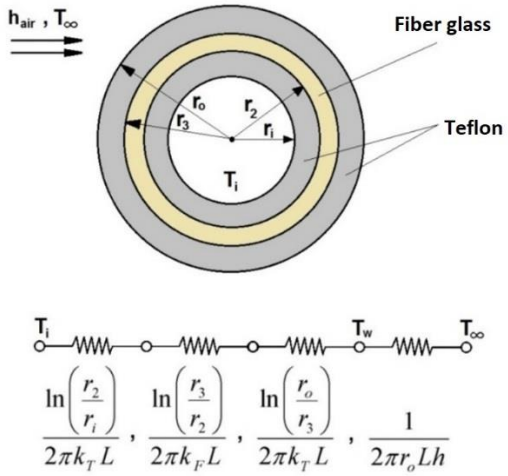

Figure 1. The scheme of the double-shelled incubator and its thermal resistance

Fourier's law and Newton's law for the cooling are expressed as [22]:

$$q_{cond+conv} = \frac{2\pi L(T_i - T_\infty)}{\frac{ln\left(\frac{r_2}{r_i}\right)}{k_t} + \frac{ln\left(\frac{r_3}{r_2}\right)}{k_f} + \frac{ln\left(\frac{r_o}{r_3}\right)}{k_t} + \frac{1}{r_o h_{air}}} \qquad (2)$$

$$q_{cond+conv} = \frac{2\pi(0.06)(318.15-293.15)}{\frac{ln\left(\frac{0.0575}{0.05}\right)}{0.35} + \frac{ln\left(\frac{0.0675}{0.0575}\right)}{0.039} + \frac{ln\left(\frac{0.075}{0.0675}\right)}{0.35} + \frac{1}{0.075(25)}}$$

(3)

$$q_{cond+conv} = 1.7626w \qquad (4)$$

Therefore, the outer surface temperature can be calculated as:

[Downloaded from sjis.srpub.org on 2026-11-27]

[DOI: 10.47176/sjis.4.1.1]

$$q = 2\pi r_o L h(T_w - T_\infty) \quad (5)$$
$$T_w = 295.64°k \quad (6)$$

$$q_{rad} = \varepsilon\sigma A(T_w^4 - T_\infty^4) \quad (7)$$
$$q_{rad} = 0.85(5.67 \times 10^{-8})0.02826((295.64)^4 - (293.15)^4) \quad (8)$$
$$q_{rad} = 0.346w \quad (9)$$

Using Eqs. (2), (4) and (6), the heat transfer losses of the binding tubes between the incubator cylinders and the cooler/heater can be obtained. All tubes are 0.7 m long and the liquid velocity inside them is 0.849 m/s.

$$q_{tube} = 8.821w \quad (10)$$

Finally, the heat transfer losses can be computed as:

$$q_{Total} = 10.38w \quad (11)$$

Considering the safety factor of 4, 40 watts is chosen for the power of the cooler and heater. It is worth mentioning that all the calculations related to the incubator have been done without considering the insulation. The degree of whole temporal waste has If it is assumed that the outer force is applied on the nut only when the piston has a forward movement and maximum torque is needed for moving the nut, the torque is calculated as [23]:

$$T_R = \frac{Fd_m}{2}\left(\frac{l+\pi f d_m}{\pi d_m - fl}\right) \quad (12)$$

By knowing the outer surface temperature, the amount of the radiation of heat transfer can be computed using Stefan-Boltzmann`s Law [22]:

been 16.24 w, through good insulation such waste has been decreased to 10.38 w which in turn uses up less energy and the system is optimized.

The mechanism of solvent injection

Two 50 mL syringes are used for the solvent injection inside the incubator. For this purpose, a mechanism is needed to follow a specific algorithm and push the piston of the syringes so that a definite volume of solvents is injected. Figure 2 shows a top view of the injection system. A linear actuator is used to move the pistons. Based on the obtained results from the accomplished experiments, the needed force to inject the solvent through the 50 mL syringe with the maximum speed of 2 mL/min is 11.57 *N*. The accumulative force for the two syringes is then 23.15 *N*. By considering the applied power, necessary torque for the piston movement can be calculated.

$$T_R = \frac{23.15(9.026)}{2}\left(\frac{1.5+\pi(0.2)(9.026}{\pi(9.026-(0.2)(1.5)}\right) \quad (13)$$
$$T_R = 26.7\ N.mm \quad (14)$$



Figure 2. Top view of the injection system

Electronic and the processor unit

The electronic section of the device consists of a sensor, a power supply and a processing unit. Figure 3 shows the schematic of the electronic and processor unit of the developed system. AATmega128 (Atmel corporation, California, United States) is used as a processing core. The technical properties of the functions on the device performance are selected based on the results obtained from the calculation in the previous sections and investigated in detail. The energy supply of the device is provided by 220 volts and with a USB cable connected to a computer.

[Downloaded from sjis.srpub.org on 2026-11-27]

[DOI: 10.47176/sjis.4.1.1]

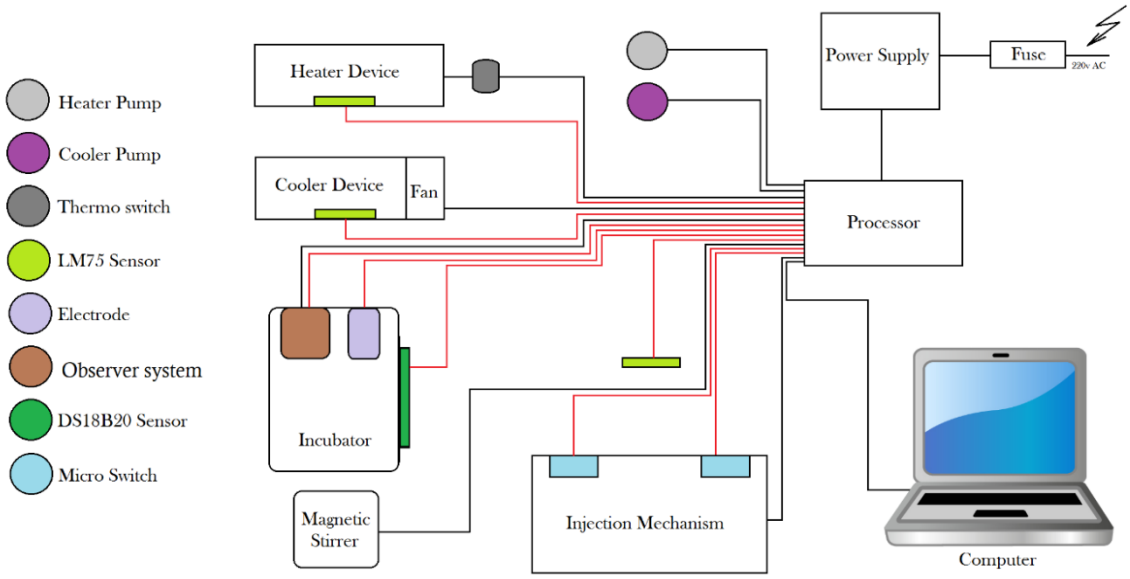

Figure 3. The schematic of the electronic and processor unit of developed automated system

Shape of the device

Depending on the type and location of the device application, it can be designed at various frames. Adaptation of the device with such criteria determines its applicability and performance. Since the represented device is utilized in laboratories, there are some requirements for its formic design. Tools and systems used in the laboratories are usually needed to be quiet to avoid any distraction for the operators or other researchers working in the laboratories. The placement of the mentioned compartments of the system inside the closed frame can be solved these problems. Figure 4 shows the outer appearance of the developed system. It should be mentioned that since the system is connected to a computer and controlled by a custom built software, there are no switches, controllers, or monitors on the device.

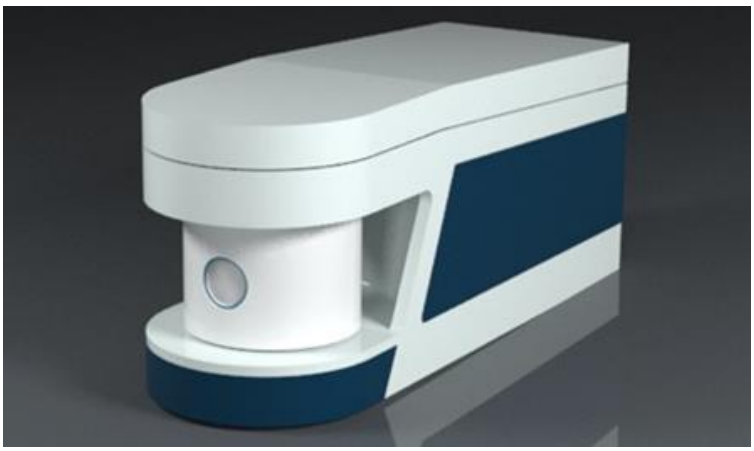

Figure 4. The perspective of a device

Device software

In order to set, run the device and save primary data, a software under Microsoft Windows is designed and used by which the operator can set and save the parameters related to the working conditions including temperature, the signal intensity for neat solvent, the rate of injection of solvents, the number of equilibration check cycles, and the stirrer rate. Furthermore, the operator can trace the current state of experiments and command necessary functions accordingly.

[Downloaded from sjis.srpub.org on 2026-11-27]

[DOI: 10.47176/sjis.4.1.1]

Results and Discussion

Temporal tolerance check

In this section, the performance of technical sections and the professional function of the device is investigated. The function of the incubator is very important because it is required for adjusting the experimental conditions such as cooling and heating of the experiment media. In order to check the performance of the cooler segment, the system is used at the ambient temperature of 27.4 °C which is 7.4 °C higher than the adjusted temperature of the system (i.e. 20 °C). Figure 5 shows the time lapse for reaching from 27.4 °C to 20 °C in the worst environment conditions. The stability of the temperature is tolerated at around 0.1 °C. The same check occurred for the heater. For this purpose, the incubator temperature is set at 40 °C and the system is restarted. As can be seen from Figure 6, after increasing the incubator temperature, the temporal balance was gained and the temperature fluctuated around the defined range (temporal tolerance is ±0.1 °C).

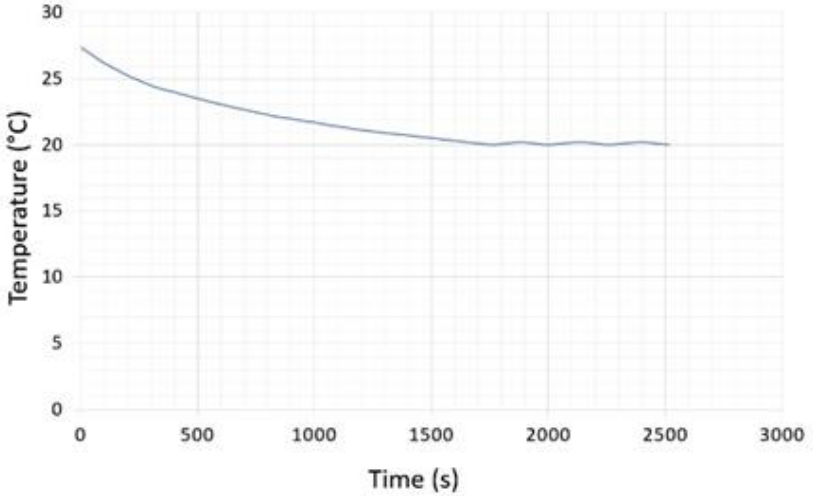

Figure 5. Performance of the cooler

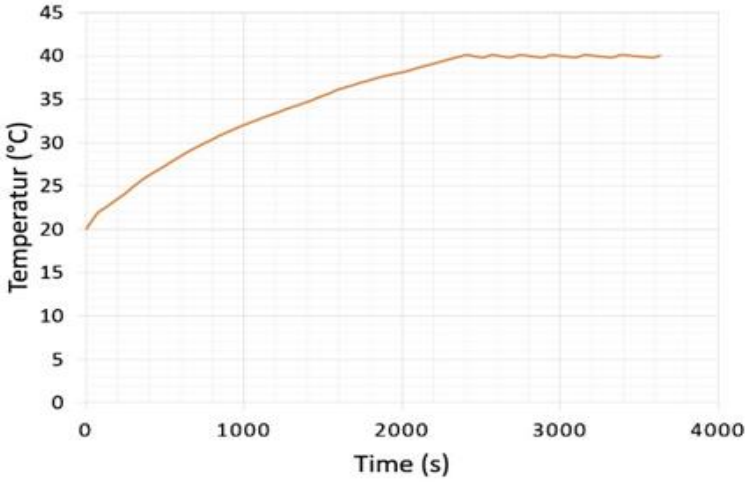

Figure 6. Performance of the heater

Professional test of the system

The professional test of the device is carried out by measuring the solubility of the acetaminophen in the aqueous mixtures of ethanol as an important and most commonly used pharmaceutical cosolvent in the industry at temperatures of 20°C and 25°C. The obtained results are summarized in Table 1. When the data measured by this device at a given temperature are compared with previously reported data in the literature, it can be seen that the *IPD*s% varied from -4.9% to 5.1%, with an overall *IPD*% of 2.3%.

[Downloaded from sjis.srpub.org on 2026-11-27]

[DOI: 10.47176/sjis.4.1.1]

Table 1
Solubility (g/L) of acetaminophen in aqueous mixtures of ethanol; Corresponding values from the literature; and *IPD*s%.

Temp.(°C)	Ethanol mass fraction	Measured	Reported (20)	*IPD*%
20	0.0	12.62 ± 0.47	12.65	-0.26
20	0.2	34.91 ± 1.37	32.8	6.43
20	0.5	145.63 ± 2.42	146.33	-0.48
20	0.7	199.43 ± 2.52	195.16	2.19
20	1.0	130.46 ± 3.26	124.86	4.49
25	0.0	14.55 ± 0.07	15.11	-3.73
25	0.2	45.09 ± 0.99	47.27	-4.61
25	0.5	160.32 ± 5.72	165.07	-2.88
25	0.7	212.38 ± 3.28	209.97	1.15
25	1.0	137.27 ± 0.54	133.93	2.49

Discussion and Conclusion

Development and validation of automated solubility determination devices are highly important to speed up the solubility determination of drugs and/or drug candidates in the pharmaceutical industry. A comparison of the obtained solubility data by the proposed device with those reported in the literature shows that the newly developed system can be used in the laboratories to determine the solubility with a high level of precision and low replication error. In order to reach the desired temperatures, an incubator is designed, tested and fixed which is capable of increasing and decreasing the temperature through a heater and cooler, respectively. The precise tolerance of ±0.1°C has been approved. According to the optimization of the incubator and decreasing the temporal waste of it, the stability of temperature and energy use have also been decreased. The injection mechanism has the feasibility of installing a 50 cc syringe whose volume can be controlled by adjusting the speed of the piston. Based on the results and diversity of solutions available, if the mechanism can utilize the syringes with various volumes, better results can be obtained. Furthermore, the solution chamber for the evasive solution in the long run and at high temperatures had some evaporation therefore a condenser with high performance is necessary.

References

1. Di L, Fish PV, Mano T. Bridging solubility between drug discovery and development. *Drug Discov Today*. 2012; 17(9): 486-95.
2. Alsenz J, Kansy M. High throughput solubility measurement in drug discovery and development. *Adv Drug Deliv Rev*. 2007; 59(7): 546-567.
3. Higuchi T, Connors A. Phase-solubility techniques. 1965.
4. Jouyban A. Review of the cosolvency models for predicting solubility of drugs in water-cosolvent mixtures. *J Pharm Pharm Sci*. 2008; 11(1): 32-58.
5. Hankinson R, Thompson D. Equilibria and solubility data for the methanol-water-1-nitropropane ternary liquid system. *J Chem Eng Data*. 1965; 10(1): 18-9.
6. Ren B-z, Chong H-g, Li W-r, Wang F-a. Solubility of potassium p-chlorophenoxyacetate in ethanol+ water from (295.61 to 358.16) K. *J Chem Eng Data*. 2005; 50(3): 907-909.
7. Jouyban A, Chew NYK, Chan H-K, Sabour M, Acree Jr WE. A unified cosolvency model for calculating solute solubility in mixed solvents. *Chem Pharm Bull*. 2005; 53(6): 634-637.
8. Jouyban A. Handbook of solubility data for pharmaceuticals Boca Raton (FL) CRC Press. 2010.
9. Ward HL. The solubility relations of naphthalene. *J Phys Chem*. 1926; 30(10): 1316-1333.
10. Yang Z-S, Zeng Z-X, Xue W-L, Zhang Y. Solubility of bis (benzoxazolyl-2-methyl) sulfide in different pure solvents and ethanol+ water binary mixtures between (273.25 and 325.25) K. *J Chem Eng Data*. 2008; 53(11): 2692-2695.
11. Kong CY, Sone K, Sako T, Funazukuri T, Kagei S. Solubility determination of organometallic complexes in supercritical carbon dioxide by chromatographic impulse response method. *Fluid Phas Equil*. 2011; 302(1): 347-353.

[Downloaded from sjis.srpub.org on 2026-11-27]
[DOI: 10.47176/sjis.4.1.1]

12. Hoelke B, Gieringer S, Arlt M, Saal C. Comparison of nephelometric, UV-spectroscopic, and HPLC methods for high-throughput determination of aqueous drug solubility in microtiter plates. *Anal Chem*. 2009; 81(8): 3165-3172.
13. Zhao Y, Bao Y, Wang J, Rohani S. In situ focused beam reflectance measurement (FBRM), attenuated total reflectance Fourier transform infrared (ATR-FTIR) and Raman characterization of the polymorphic transformation of carbamazepine. *Pharm*. 2012; 4(1): 164-178.
14. Simone E, Saleemi AN, Nagy ZK. Raman, UV, NIR, and Mid-IR spectroscopy with focused beam reflectance measurement in monitoring polymorphic transformations. *Chem Eng Technol*. 2014; 37(8): 1305-1313.
15. Dehring KA, Workman HL, Miller KD, Mandagere A, Poole SK. Automated robotic liquid handling/laser-based nephelometry system for high throughput measurement of kinetic aqueous solubility. *J Pharm Biomed Anal*. 2004; 36(3): 447-456.
16. Dinter C, Schuetz A, Blume T, Weinmann H, Harre M, Neh H. Automated solubility determination using a customized robotic system and a turbidity probe. *J Assoc Lab Autom*. 2005; 10(6): 408-411.
17. Wenlock MC, Austin RP, Potter T, Barton P. A highly automated assay for determining the aqueous equilibrium solubility of drug discovery compounds. *J Assoc Lab Autom*. 2011; 16(4): 276-284.
18. Jouyban-Gharamaleki V, Jouyban-Gharamaleki K, Shayanfar A, Khoubnasabjafari M, Jouyban A. An automated system for determining drug solubility based on laser monitoring technique. *J Lab Autom*. 2015; 20(1): 3-9.
19. Jouyban-Gharamaleki V, Jouyban A, Acree WE, Rahimpour E. Smart systems for determination of drug's solubility.*Drug Dev Indust Pharm*. 2019; 45(2).
20. Jiménez JA, Martínez F. Thermodynamic magnitudes of mixing and solvation of acetaminophen in ethanol+ water cosolvent mixtures. *Rev Acad Colomb Cienc*. 2006; 30(114): 87-99.
21. www.KIPAC2012@Live.com
22. Holman JP. Heat Transfer, 10th Edition, McGraw-Hill Primis, New York, United States, Chapter 2, 2010; 27-66.
https://books.google.com/books/about/Heat_transfer.html?id=zCXxKEfI1gEC
23. Budynas RG, Nisbett KJ. Shigley's Mechanical Engineering Design, 8th Edition, McGraw-Hill Primis, New York, United States, Chapter 7, 2008; 402-420.
http://www.chegg.com/homework-help/shigley-s-mechanical-engineering-design-8th-edition-solutions-9780073312606

SJIS

Copyright: © 2022 The Author(s); This is an open-access article distributed under the terms of the Creative Commons Attribution License (http://creativecommons.org/licenses/by/4.0), which permits unrestricted use, distribution, and reproduction in any medium, provided the original work is properly cited.

Citation: Jouyban-Gharamaleki V, Ghanbari A, Sarbaz Y, Jouyban A, Rahimpour E. Development and Validation of a New Automated System for Solubility Determination. SJIS, 2022; 4(1): 1-8.

https://doi.org/10.47176/sjis.4.1.1

[Downloaded from sjis.srpub.org on 2026-11-27]

[DOI: 10.47176/sjis.4.1.1]

Symbols

T_∞	Temperature of Environment (k)	ε	Emissivity coefficient
T_i	Temperature of Initial (k)	σ	Stefan Boltzmann constant
T_w	Temperature of wall (k)	f	Friction coefficient
q_{cond}	Conduction heat-transfer rate (w)		
q_{conv}	Convection heat-transfer rate (w)		
q_{rad}	Radiation heat-transfer rate (w)		
h	Heat-transfer coefficient($^{w}/_{m^2 \circ k}$)		
r	Radius (m)		
k	Thermal conductivity ($^{w}/_{m \circ k}$)		
L	Length (m)		
q	Heat-transfer rate (w)		
A	Area (m^2)		
F	Force (N)		
l	Pitch (mm)		
T_r	Torque ($N.mm$)		
d_m	Diameter of screw (mm)		

[Downloaded from sjis.srpub.org on 2026-11-27]

[DOI: 10.47176/sjis.4.1.1]